Uneven Seven-Sided Dice Roller

Oğuzhan ALASULU
Student, Department of EEE,
Abdullah Gul University,
Kayseri, Turkey
oguzhan.alasulu@agu.edu.tr

Muhammed Emin SÖYLEMEZ
Student, Department of EEE,
Abdullah Gul University,
Kayseri, Turkey
muhammedemin.soylemez@agu.edu.tr

***Abstract*—This paper presents the design and implementation of an uneven seven-sided dice roller using digital system design techniques. The system consists of a 1-bit data generator, a 2-bit full-adder, and two registers for intermediate and output storage. A key feature of the system is the production of a random 3-bit number (equivalent to a decimal value from 1 to 7) at a frequency of 100 Hz. The data generator circuit, responsible for producing the random pulses, is designed, and constructed using discrete components, in accordance with specified frequency constraints. A custom full-adder circuit, implemented in CMOS and IC configuration, is employed to process the input numbers, and generate the output. Additionally, a circuit is devised to distribute the generated data to the intermediate register, ensuring proper timing and synchronization. The system is interfaced with a microcontroller for data retrieval and analysis. Simulation results and physical implementation demonstrate the functionality and effectiveness of the proposed design.**

Keywords* — *Digital system design, uneven seven-sided dice roller, pulse generator, full-adder circuit, CMOS configuration, microcontroller interface

I. INTRODUCTION

Random number generation is a fundamental aspect of various electronic systems, with applications ranging from gaming to cryptography. In this project, the design and implementation of an uneven seven-sided dice roller was presented, aiming to generate random 3-bit numbers (equivalent to decimal values ranging from 1 to 7) at a frequency of $100Hz$.

As shown in Figure 1, the architecture of the system is composed of a 1-bit data generator, an intermediate register, a 2-bit full-adder, and an output register. A key innovation in project design is the use of the intermediate register, positioned before the full-adder circuit, which allows for a more compact and efficient implementation.

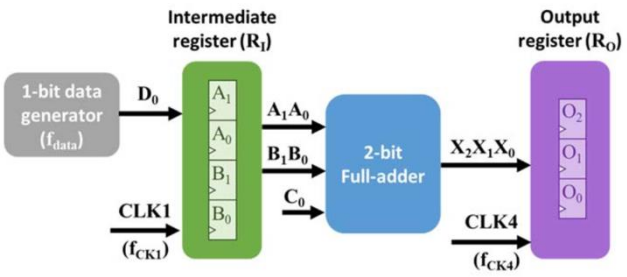

Fig 1. Illustration of a schematic diagram of an uneven seven-sided dice roller

The data generator circuit is responsible for generating random pulses, simulating the rolling of a seven-sided dice. These random pulses are then stored in the intermediate register and subsequently processed by the full-adder circuit, taking into account the fixed carry bit. Furthermore, a custom full-adder circuit is designed using CMOS configuration, optimizing its performance and efficiency. A circuit is also developed to distribute the generated data to the intermediate register, ensuring proper timing and synchronization. Throughout the project, simulation results are obtained to validate the functionality and performance of each circuit component. Additionally, physical implementation of the circuits is carried out, demonstrating the feasibility and effectiveness of the proposed design.

In summary, this project aims to provide a compact and efficient solution for generating random numbers using digital system design techniques, with potential applications in various fields requiring random number generation.

II. DESIGN AND PROCEDURES

The design and implementation of the uneven seven-sided dice roller were carried out through a series of systematic tasks. Firstly, data generator part involved designing and simulating a pulse generator circuit to produce random pulses within the required frequency range. Following this, full adder circuit part focused on designing and simulating a custom full-adder circuit in CMOS configuration, optimized for efficient processing of input numbers. Subsequently, intermediate register part addressed the generation of signals A and B, essential for the operation of the dice roller. A circuit was designed to distribute the generated data to the intermediate register, ensuring proper timing and synchronization. Finally, the entire system was integrated and tested to demonstrate the functionality of the uneven seven-sided dice roller. Throughout the process, each task followed a systematic approach, with simulation results used to validate the design before physical implementation. As the final step, an assembly process was carried out to mount all circuits together. Detailed procedures for each task are presented in the subsequent sections.

A. Data (D_0) Generator

The Data (D_0) generator serves a crucial role within the uneven seven-sided dice roller system by producing a random pulse signal necessary for its operation. This report details the design, implementation, simulation, and validation of the pulse generator which has delay stages with single input single output. In one study in the literature explained that based on Barkhausen criteria every phase must add 180°/N phase to signal (Ramazani et al., 2014). Hereby, data generator has to have odd number of stages. In the uneven seven-sided dice roller system, the Data (D_0) generator acts as the primary source of randomness, providing the necessary pulses to facilitate the dice rolling mechanism. These pulses dictate the

timing and sequence of events, ensuring fair and unpredictable outcomes. The objective of this task is to generate a random pulse signal with a frequency range of $10f_{\text{ck1}}$ to $100f_{\text{ck1}}$. To achieve this, a 3-stage ring oscillator was implemented, utilizing BS250 DMOS (p-channel) and 2n7000 DMOS (n-channel) transistors.

The ring oscillator circuit consists of three stages, each stage comprising a PMOS (BS250) and an NMOS (2n7000) transistor. The PMOS transistors are connected to the drain of the NMOS transistors, forming a feedback loop. This configuration allows oscillation to occur, generating a square wave output. The selection of this circuit was based on its simplicity, efficiency, and ability to generate the required frequency range reliably. DMOS transistors give better results at high voltage values than CMOS. In addition, these transducers were present, so in the project wasn't be faced any supply problems. In addition to transistor selection and topology, the choice of resistance and capacitance values is crucial for determining the frequency of oscillation. This formula was utilized:

$$f = \frac{1}{2.n.T} \rightarrow T = \frac{1}{2.n.f} \qquad (1)$$

In Equation (1), T represents the period of oscillation, which is the time taken for one complete cycle of the oscillation. The variable n denotes the number of stages in the ring oscillator, with $n = 3$ in this context. Finally, f is the desired frequency of oscillation, determining how many cycles occur per unit time.

$$T = \frac{Tphl+Tplh}{2}, \qquad (2)$$

$$T = \frac{1}{2\ x\ 3\ x\ 21991} = 0.00000757885 \text{ s}$$

Using Equation (2), where T_{phl} and T_{plh} represent the propagation delays for the rising and falling edges respectively, the period T can be calculated for each stage by specifying the desired frequency (f = 21.991 kHz) and the number of stages (n = 3). The calculation of T incorporates data from the component datasheets of the BS250 (p-channel MOSFET) and 2N7000 (n-channel MOSFET) to determine the contributions of these components to the overall period. Given the period T, an appropriate capacitance value C can be chosen. For instance, if C=1pF is selected, the resistance R can be determined approximately $10k\Omega$. After calculating R, appropriate resistor values were chosen to ensure proper oscillation within the desired frequency range. This method allowed us to design a ring oscillator with the specified frequency characteristics, ensuring the reliable generation of the pulse signal required for the uneven seven-sided dice roller system.

SPICE simulations were conducted to verify the functionality of the ring oscillator circuit. The circuit parameters were set according to the calculated values for resistance and capacitance, with a chosen capacitance of 1pF and a resistance of approximately 10 kHz. As shown in Figure 2, the simulations yielded a square wave output with a frequency of 21.69 kHz, as expected based on project design specifications. This frequency ensures that the random pulses generated by the circuit fall within the required frequency range for the operation of the uneven seven-sided dice roller. In Figure 3, the simulation transition times from low to high (t_f) and from high to low (t_r) were measured to ensure they are within 5% of the period. With a calculated period of 46.1031 microseconds, t_f was found to be 1.6421 microseconds, and t_r was 965.9714 nanoseconds. These values confirm rapid transitions, meeting the system's requirements for efficient operation and proper synchronization with the clock signal.

The successful simulation results validate the functionality of the pulse generator circuit and ensure that it meets the design specifications for generating random pulses within the required frequency range.

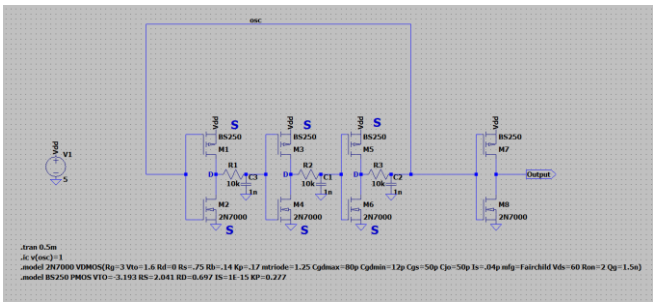

Fig 2. LTSPICE Diagram of Data (D_0) Generato

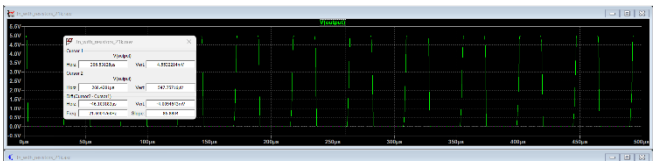

Fig 3. Frequency of designed circuit diagram in LTSPICE

Table 1 demonstrates that the theoretical calculation closely matched with LTSPICE simulation findings, with the output frequency averaging around 22 kHz. The waveform exhibited clear transitions between voltage levels, ensuring reliable operation within the system. The hand-calculated frequency of 21.991 kHz suits with the simulation results, validating the accuracy of project design approach. Additionally, Table 2 shows that transition times from low to high and from high to low were measured to ensure they were below 5% of the period, maintaining signal integrity.

Table 1. Comparison of frequency values in simulation and calculation

	Hand-Calculation	**LTSPICE**
Frequency Values	21.99 kHz	21.69 kHz

Table 2. Propagation delay values in simulation

	5% of Period (T)	**Low to High (t_f)**	**High to Low (t_r)**
Time (s)	2.305155 µs	1.6421 µs	965.9714 ns

B. *Full Adder Circuit*

In this task, the design and implementation of a crucial component, the full adder circuit in a CMOS configuration, were undertaken. One study reveals that adder core is the crucial structure item in microprocessors and digital signal processors (Tung et al., 2007). The objective was clear: to craft a circuit capable of accurately computing the sum and carry-out of three input bits A, B, and C_{IN} (Carry-in) and to showcase its seamless functionality. Within this system, the full adder is entrusted with the task of summing two 2-bit numbers alongside a fixed carry input of '1', thereby

generating both a sum and carry-out. The full adder plays a crucial role in the circuit design, where efficiency and simplicity were prioritized. The selected design aims to optimize both, ensuring an efficient and streamlined implementation. The fixed nature of the carry input was leveraged (C_{IN}), simplifying the traditional full adder structure and thereby reducing the number of transistors required for implementation. Chosen design incorporates PMOS transistors (BS250) and NMOS transistors (2N700), carefully balancing logic functionality with adherence to voltage level specifications. The logical expression for the simplified versions of the SUM and C_{OUT}, as derived from Table 3, are as follows:

$$SUM = (C_{IN}) \oplus (A \oplus B) \quad (3)$$
$$C_{OUT} : AB + C_{IN}(A'B + AB') \quad (4)$$

Table 3. Truth table of 1-bit full adder circuit

Inputs			Outputs	
A	B	C_{IN}	SUM	C_{OUT}
0	0	0	0	0
0	0	1	1	0
0	1	0	1	0
0	1	1	0	1
1	0	0	1	0
1	0	1	0	1
1	1	0	0	1
1	1	1	1	1

In equation (3), the SUM is determined by the XOR ($\oplus$) operation between the carry-in (C_{IN}) and the XOR ($\oplus$) operation of inputs A and B . Equation (4) provides the logical expression for the carry-out (C_{OUT}), which is a function of the AND operation between inputs A and B, along with the carry-in (C_{IN}), and the OR operation between the product of input A and the complement of input B, and the product of inputs A and B, as indicated.

In the design of project full-adder circuit, C_{IN}, the carry-in voltage, has been deliberately set to 5 volts. The decision to set C_{IN} to 5 volts was motivated by the intention to introduce randomness and unpredictability into the circuit, while also ensuring that the circuit does not produce a zero-output value. This adding '1' deliberate variation adds complexity to the addition process, resulting in a less predictable circuit output. As seen in equation (5), by setting C_{IN} to 5 volts, the output of full-adder circuit becomes dependent not only on the input values (A and B) but also on this additional random element. This variability can be particularly advantageous in applications where randomness or unpredictability is desired, such as cryptographic systems or random number generators. The logical expressions for the simplified versions of SUM and C_{OUT}, as derived from Table 4, are as follows:

$$SUM = AB + A'B'(XNOR\ Gate) \quad (5)$$
$$C_{OUT} : A + B\ (OR\ Gate) \quad (6)$$

Table 4. Truth table of 1-bit full adder circuit for C_{IN}=1

Inputs			Outputs	
A	B	C_{IN}	SUM	C_{OUT}
0	0	1	1	0
0	1	1	0	1
1	0	1	0	1
1	1	1	1	1

These expressions provide clear insights into computation carried out by the full adder circuit when C_{IN} considered as 5 voltages (Logical "1" value).

Operating within a CMOS configuration, project circuit capitalizes on the fixed C_{IN} value of '1'. This strategic choice allows us to streamline project design, employing $XNOR$ gates for sum computation and OR gates for carry-out (C_{OUT}) calculation. In the Figure 4, in order to achieve this, two CMOS inverters were integrated to generate A' and B' from inputs A and B , respectively. These signals are then seamlessly fed into the $XNOR$ gate for sum calculation and the OR gate for C_{OUT} determination. The functionality of full-adder circuit unfolds as follows: Inputs A, B, and C_{IN} are seamlessly fed into the circuit. A and B inputs undergo inversion via CMOS inverters, yielding Anot and Bnot. Anot, B', and C_{IN} are directed into the $XNOR$ gate, facilitating sum calculation. Simultaneously, A', B', and C_{IN} are routed into the OR gate, enabling Cout computation. The resulting output, SUM, represents the sum of A, B, and C_{IN}. C_{OUT}, the carry-out, signifies the generated carry beyond the unit's capacity. In simplification, the fixed C_{IN}value of '1' ensures a consistent carry input, streamlining the circuit's operation and enhancing overall efficiency.

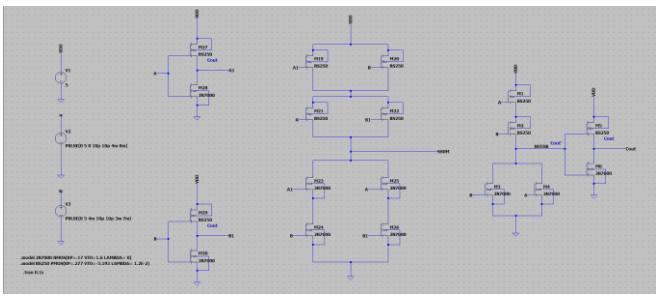

Fig 4. LTSPICE Diagram of Full Adder Circuit

SPICE simulation was conducted to validate the functionality and performance of the designed full adder circuit. Proper transistor model parameters were employed to accurately represent the behavior of the physical components. As illustrated by Figure 5, The simulation results were analyzed to ensure correct logic values for the sum and carry-out, as well as appropriate voltage levels within the specified range.

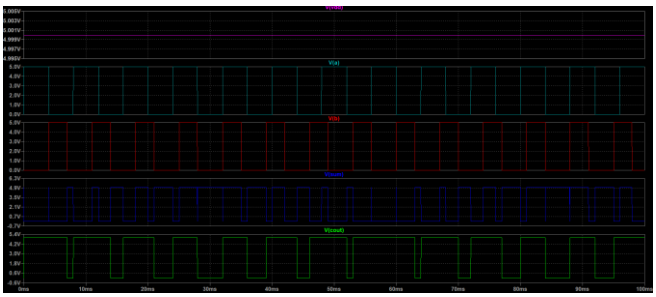

Fig 5. Monitors of Vdd, A, B, SUM, and C_{out} Voltages for Simplified Circuit of Full Adder Circuit

The simulation results confirmed the proper operation of the full adder circuit, demonstrating accurate logic functionality and voltage levels consistent with the system specifications. The simplified design approach, leveraging the fixed carry input of '1', facilitated a reduction in transistor count while maintaining performance integrity.

C. *Intermediate Register (R_I)*

Intermediate Register task aimed to generate signals A and B, crucial components for the operation of the uneven seven-sided dice roller system. This involved a systematic approach, starting with the implementation of a frequency divider circuit to ensure proper timing and synchronization. Another study described that also an increasing number of devices other than synchronous technologies are expected to deliver frequency division and regulation (Milano and Ortega, 2017).

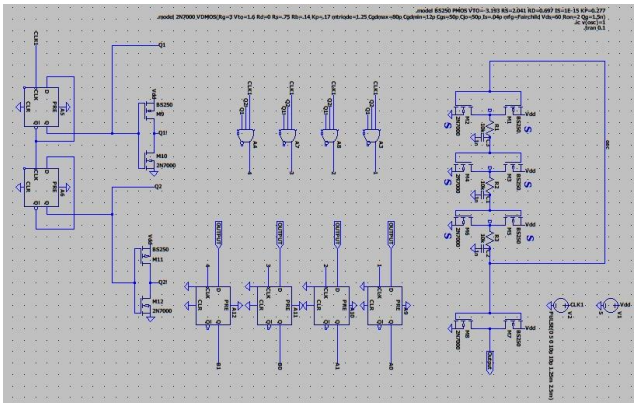

Fig 6. LTSPICE Diagram of Intermediate Register

As depicted in Figure 6, in order to achieve this, a frequency divider circuit was constructed using two D flip-flops (74LS74 IC chips). This circuit was designed to reduce the input clock frequency of $400Hz$ to $100Hz$, which is the required operating frequency for the uneven seven-sided dice roller system. By dividing the clock frequency by 4, the frequency divider ensured that the system could accurately process data at the desired rate.

Following the frequency division, the next step was to generate conditions S_0, S_1, S_2, and S_3, corresponding to the binary values 00, 01, 10, and 11, respectively. This was accomplished using a multiplexer (MUX) implemented with four AND gates (74HC08 IC chips). The inputs to these AND gates were S_1 (a two-bit input representing the output of the frequency divider) and CLK_4 (operating at $400Hz$). MUX provided the shifted input of the required signal for subsequent stages by selecting the appropriate condition according to the current state of the system.

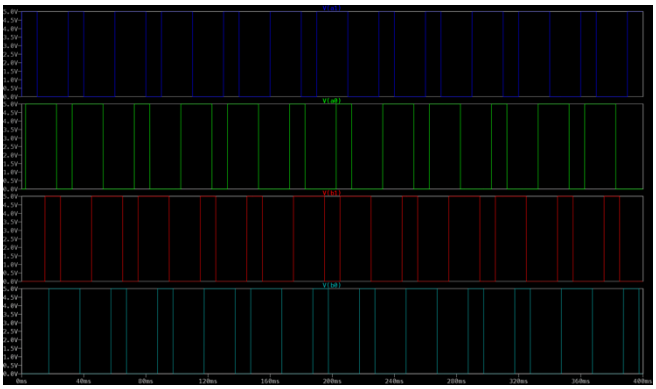

Fig 7. Monitors of A_1, A_0, B_1, and B_0 for Intermediate Register Circuit

The entire system, including the frequency divider, mux, and D flip-flops, was simulated using SPICE to verify its functionality. The simulation results confirmed that each component operated as intended, generating the correct signals A and B required for the full-adder circuits. As demonstrated in the Figure 7, the outputs of the AND gates were then connected to four D flip-flops (74LS74 IC chips). These flip-flops served to produce the A_0, A_1, B_0, and B_1 values required as inputs for the full-adder circuits. The D_0 signal, generated by the ring oscillator circuit in data generator task, was provided as the D input for the flip-flops. Additionally, the outputs of the AND gates were used as the clock inputs for the D flip-flops, ensuring proper synchronization of the signals A and B with the system clock.

SPICE simulations were conducted to verify the functionality of each component in the system. The frequency divider successfully reduced the input clock frequency from $400Hz$ to $100Hz$, ensuring that the system operated at the desired frequency. The mux accurately generated conditions S_0, S_1, S_2, and S_3 based on the current system state, while the D flip-flops synchronized the signals A and B with the system clock. The simulation results confirmed the proper functioning of each component, guaranteeing the successful generation of inputs for the full-adder circuits in the uneven seven-sided dice roller system.

D. *Assembly*

The final task aimed to integrate all components to demonstrate the function of the uneven seven-sided dice roller system. This involved combining the data generator, full-adder circuits, signal generation, and output register to produce random numbers between 1 and 7. The mission was to ensure that each component operated harmoniously within the system, eventually leading to the successful generation and storage of random numbers.

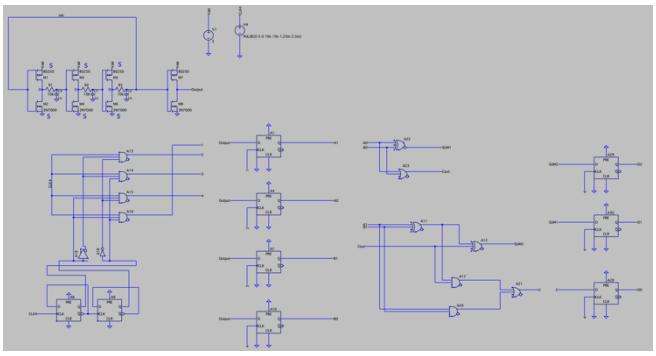

Fig 8. LTSPICE Diagram of Entire Circuit

As indicated in Figure 8, the full-adder circuit, constructed using two XOR ($\oplus$) gates (74HC86), two AND gates (74HC08), and one OR gate (74HC32), was designed to accurately add the input numbers and produce the first bit of the result SUM_1. The first full-adder circuit, built using transistors, played a crucial role in generating SUM_1. Simultaneously, the second full-adder circuit, constructed using IC chips, generated the SUM_2 output. The Carry output of the second full-adder circuit was cascaded to serve as the Carry input (C_{IN}) for the next bit, ensuring the proper addition of multi-bit numbers. The output register, constructed using three D flip-flops (74LS74), was designed to store the generated random numbers accurately. The SUM, SUM_2, and Carry outputs from the full-adder circuits were provided as inputs (D) to the flip-flops. Additionally, the clock input

(CLK_1) was derived from the AND gate output of full adder part, operating at $100Hz$.

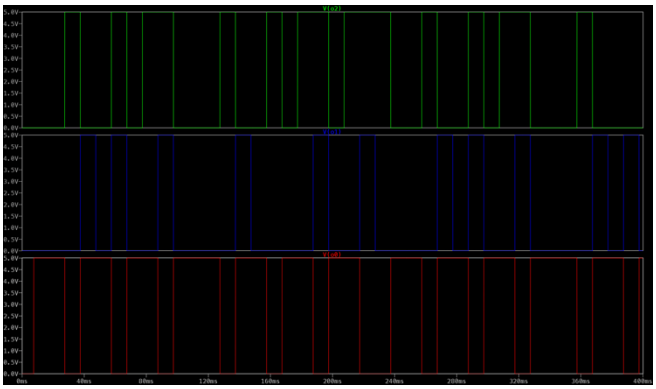

Fig 9. Monitors of O_2, O_1, and O_0

The final system underwent thorough SPICE simulation to ensure proper functionality and precise random number generation. The seamless integration of all components resulted in the successful construction of the uneven seven-sided dice roller circuit. Each component fulfilled its designated role, ensuring that the circuit operated as intended and produced the desired output of O_2, O_1, *and* O_0 as exemplified in Figure 9. The simulation results confirmed the system's proper functionality, validating its ability to generate accurate random numbers.

III. EXPERIMENTAL SETUP

In this section, previously mentioned tasks experimentally were implemented to design an uneven seven-sided dice roller system. The system aims to generate a random 3-bit number (1 to 7) at a frequency of $100Hz$. Tasks include designing a pulse generator for D_0, simulating a CMOS full-adder circuit, and creating a circuit to distribute D_0 to the intermediate register (R_I) using CLK_1 in real life. The experimental results of these implementations will be observed and documented to evaluate the functionality and performance of the system.

A. Data (D_0) Generator

Figure 10 displays the physically implementation of the ring oscillator circuit, resistors with values close to the calculated resistance of $10k\Omega$ and capacitors with a capacitance of $1pF$. Oscilloscope measurements were then taken to observe the output waveform. The experimental results closely matched our simulation findings, with the measured frequency reaching approximately 22 kHz ($22.32kHz$), demonstrating consistency between theoretical design and practical implementation.

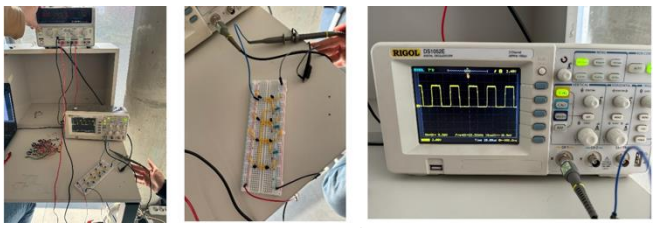

Fig 10. Experimental Setup and results of ring oscillator

B. Full Adder Circuit

The experimental setup involved theoretical design and practical implementation of a full adder circuit. Using BS250 for PMOS transistors and 2N700 for NMOS transistors, we ensured consistency between selected transistor models and those designated for physical implementation. As shown in Figure 11, the circuit, comprising 18 transistors, was constructed on a breadboard using discrete components such as CMOS inverters, $XNOR$ gates, and OR gates. Push buttons served as pulse generators for inputs A and B, allowing dynamic input control for real-time observation of the circuit's response. This integrated approach, combining theoretical design, physical implementation, and dynamic testing, aimed to comprehensively evaluate the full adder circuit's performance for potential integration into larger-scale digital systems.

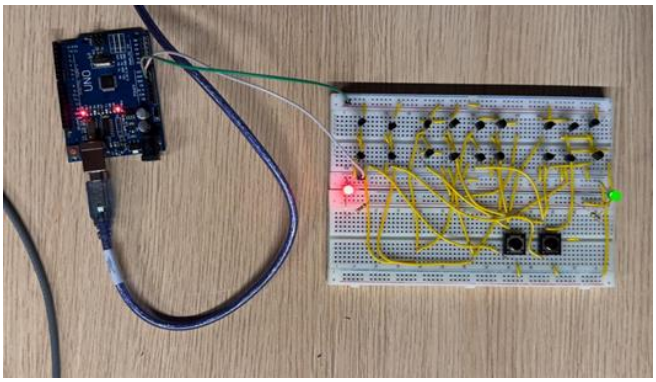

Fig 11. Experimental setup of one-bit full adder circuit which has carry value of 5 voltages

C. Intermediate Register (R_I)

This section presents the experimental implementation of intermediate register task, focusing on generating signals A and B for the uneven seven-sided dice roller system. As implemented in Figure 12, the circuit design involves distributing the previously generated D_0 signal to the intermediate register (R_I) using CLK_1. To execute intermediate register task, a circuit was meticulously designed to distribute D_0 to the R_I using flip-flops. D_0, generated earlier, serves as the data input, while CLK_1, generated by a microcontroller, controls the timing of the distribution process. The timing diagram, illustrating CLK_1, D_0, A, and B signals, was plotted on a screen to visually assess signal distribution and ensure the circuit's accurate operation. This experimental setup guarantees the precise generation of signals A and B, crucial for the system's operation.

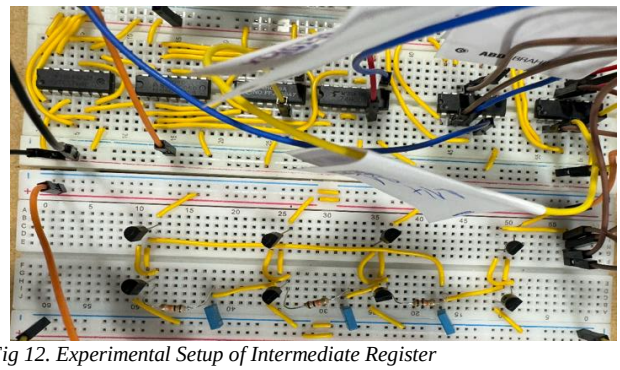

Fig 12. Experimental Setup of Intermediate Register

D. Assembly

In the final stage of the project, all components are cascaded to demonstrate the full functionality of the uneven seven-sided dice roller system as exhibited in Figure 13. This implementation ensures the generation of random numbers within the desired range and frequency. The O $(O_2O_1O_0)$ signal, representing the system's output, is collected by a microcontroller for analysis. The distribution of generated numbers is thoroughly examined, comparing it to the theoretical uneven probability. This implementation and analysis stage provides valuable insights into the system's performance, ensuring its effectiveness in generating random numbers as per the project requirements.

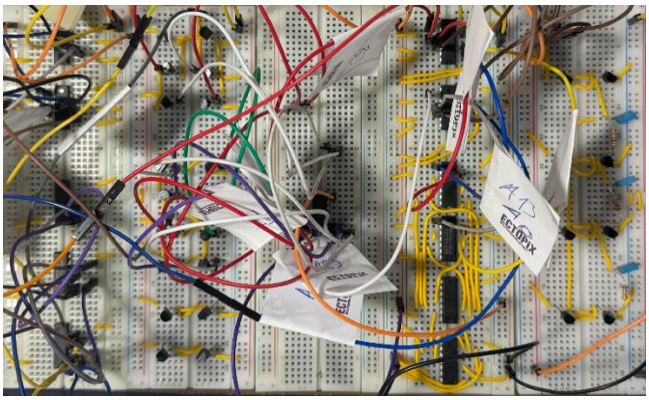

Fig 13. Experimental Setup of All Cascaded Circuit

IV. RESULTS AND DISCUSSION

The functionality and performance of the uneven seven-sided dice roller were thoroughly evaluated using a Saleae USB Logic Analyzer - 24 MHz 8 Channels. The logic analyzer, coupled with the Logic 2.4.14 software ecosystem, provided detailed insights into the system's operation and performance. Through meticulous measurement and analysis, we were able to verify the proper functioning of each component and the overall system. The measurements conducted using the logic analyzer ensured that the system operated as intended, producing random 3-bit numbers within the specified frequency range, and storing them accurately in the output register. The following sections detail the results obtained from the analysis, confirming the successful implementation of the uneven seven-sided dice roller.

Furthermore, we measured the frequency of CLK_4, which is provided by the Arduino to ensure its accuracy. The measurement was conducted using the Saleae Logic Analyzer as described in Figure 14, and the frequency of CLK_4 was found to be 400 Hz, in line with the system requirements. This confirms the proper generation of CLK_4 and ensures the accurate functioning of the uneven seven-sided dice roller system.

Fig 14. Saleae USB Logic Analyzer value of CLK4

A. Data (D_0) Generator

During the measurement phase, we analyzed the output signal D_0 using a Saleae Logic Analyzer as shown in Figure 15. The measured frequency of D_0 was found to be approximately $22.472kHz$, which closely matched the expected value. This result confirms the proper functioning of the data generator circuit, ensuring the generation of random pulses within the required frequency range. The accurate generation of D_0 is crucial for the overall operation of the uneven seven-sided dice roller, and this measurement validates its performance.

Fig 15. Saleae USB Logic Analyzer value of D_0,

B. Full Adder Circuit

Furthermore, we measured the outputs of the two-bit full adders, namely SUM_1 , SUM_2 , and Carry. SUM_1 was obtained from the full adder constructed at the transistor level, while SUM_2 and Carry were derived from the full adder implemented using IC chips. Using the Saleae Logic Analyzer as portrayed in Figure 16, we observed that SUM_1, SUM_2, and Carry were generated accurately, ensuring the proper functioning of the addition process within the uneven seven-sided dice roller system.

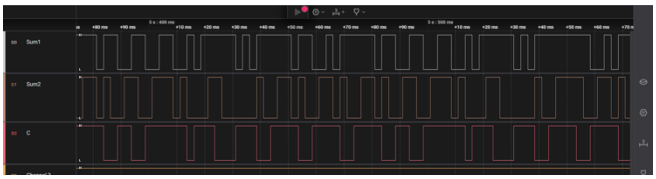

Fig 16. Saleae USB Logic Analyzer value of SUM_1, SUM_2 and C_{OUT}

C. Intermediate Register (R_I)

Additionally, we measured the outputs A_0, A_1, B_0, and B_1 which are generated by the intermediate register consisting of a frequency divider, gates (MUX), and flip-flops. Using the Saleae Logic Analyzer as denoted in Figure 17, we observed that A_0 , A_1 , B_0 , and B_1 were produced accurately, demonstrating the successful distribution of the generated data to the appropriate inputs of the full-adder circuits.

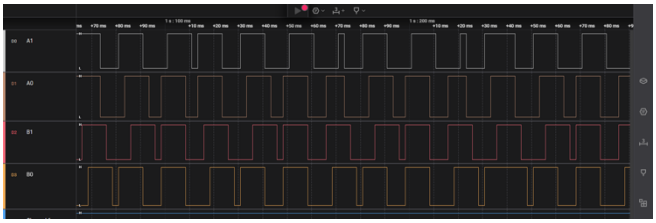

Fig 17. Saleae USB Logic Analyzer value of A_1, A_0, B_1, B_0

D. Output Values of Entire Circuit (O_2 O_1 O_0)

Furthermore, we measured the outputs O_2, O_1, and O_0, which are generated by the output register consisting of three flip-flops. Using the Saleae Logic Analyzer as presented in

Figure 18, we observed that O_2, O_1, and O_0 were generated accurately and refreshed at the desired frequency of $100Hz$.

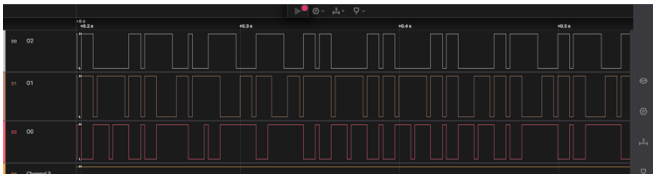

Fig 18. Saleae USB Logic Analyzer value of O_2, O_1, O_0

Additionally, we measured CLK_1, which operates at $100Hz$ and serves as the clock input for the intermediate register. The measurements in Figure 19 confirmed the proper operation of the output register and the timing accuracy of the system.

Fig 19. Saleae USB Logic Analyzer value of CLK_1

The exemplary timing diagram below in Figure 20 illustrates the expected results, which align with the theoretical predictions. Upon conducting experimental cascaded uneven seven-sided dice rolls using Saleae Analyzer, the observed outcomes closely matched the anticipated theoretical results. This successful alignment between theory and experiment validates the accuracy and reliability of the dice roller circuit.

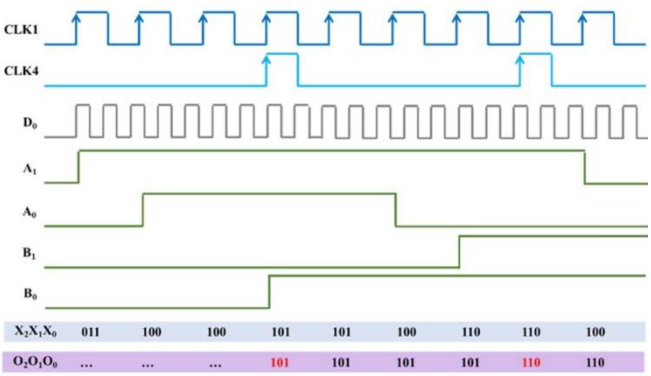

Fig 20. Exemplary Timing Diagram

As shown in Table 5, after collecting 50,000 samples, the values of O_2, O_1, and O_0 were observed using Arduino. These binary values were converted to decimal, and the distribution of the numbers was analyzed. The results showed that the number 4 occurred most frequently, with a total of 21,647 occurrences, while the numbers 1 and 7 had the least occurrences, with 1,068 and 1,743 respectively. This distribution formed a bell-shaped curve, reminiscent of a Gaussian distribution. The uneven probability distribution of the system was clearly evident, with the number 4 being the most probable outcome. This observation aligns with the design of the uneven seven-sided dice roller, where the probabilities of certain outcomes are intentionally skewed.

Table 5. Experimental Value/Frequency table of output values of $O_2O_1O_0$

VALUES	FREQUENCY	RATIO
1	1068	0,02136
2	2654	0,05308
3	11196	0,22392
4	21647	0,43294
5	8146	0,16292
6	3546	0,07092
7	1743	0,03486
SUM	50000	1

Additionally, as described in Figure 21, all values were plotted using MATLAB to further observe the distribution of the generated numbers. The plot confirmed the uneven distribution, with the number 4 occurring significantly more often than the other numbers, consistent with the theoretical expectations.

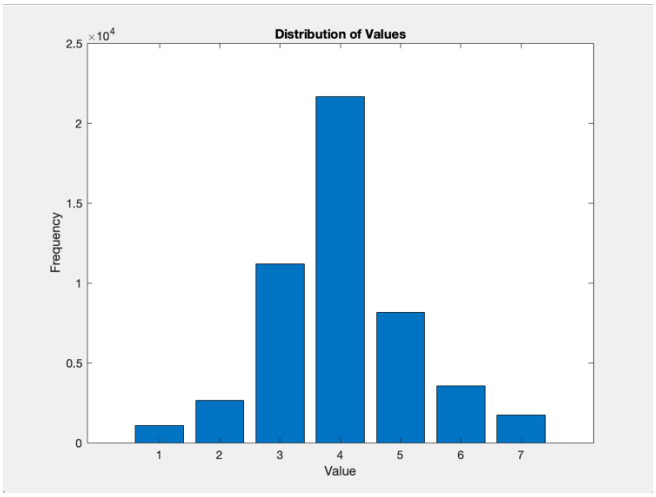

Fig 21. Plot of experimentally distribution of decimal output values in MATLAB

V. CONCLUSION

In conclusion, the project aimed to design and implement an uneven seven-sided dice roller, achieved through a systematic and meticulous approach. For data generator task, a pulse generator for D_0 was successfully designed and constructed, ensuring operation within the specified frequency range of $10f_{ck1}$ to $100f_{ck1}$. Both simulation and physical implementation of the circuit confirmed its proper functioning, generating a square wave output with a frequency of approximately $22kHz$. Moving on to full adder circuit, a two-bit full-adder circuit was designed and simulated using CMOS configuration. The simulation results validated the correct operation of the full adder, ensuring accurate addition of multi-bit numbers. For intermediate register, a frequency divider circuit, a mux for condition generation, and D flip-flops for signal synchronization were implemented to generate signals A and B. The simulation results confirmed the successful distribution of D_0 to the intermediate register (R_I) and the proper generation of A_0, A_1, B_0, and B_1. In the final task, all components were combined to demonstrate the functioning of the entire system.

The output signal (O) was collected by a microcontroller, and the distribution of the generated numbers was examined. The measured distribution closely matched the theoretical uneven probability, with the number 4 being the most frequent outcome.

Overall, the project provided valuable insights into digital system design, offering practical experience in circuit design, simulation, and implementation. The systematic approach followed throughout the project ensured the accuracy and reliability of the final system, meeting all specified requirements.

ACKNOWLEDGMENT

The proposed project was contributed by using the occasions of AGU RF Lab environment.

REFERENCES

[1] Ramazani, A., Biabani, S., & Hadidi, G. (2014). CMOS ring oscillator with combined delay stages. *AEU-International Journal of Electronics and Communications*, *68*(6), 515-519.

[2] Tung, C. K., Hung, Y. C., Shieh, S. H., & Huang, G. S. (2007, April). A low-power high-speed hybrid CMOS full adder for embedded system. In *2007 IEEE Design and Diagnostics of Electronic Circuits and Systems* (pp. 1-4). IEEE.

[3] Milano, F., & Ortega, A. (2016). Frequency divider. *IEEE Transactions on Power Systems*, *32*(2), 1493-1501.